MPS/Cypress CCG3 USB Type-C Power Bank Reference Schematic

Table Of Contents

Sheet	Description
1	Table of Contents
2	CCG3 Connections/Type-C Recp
3	C_VBUS Provider/Consumer
4	MP2636 PWR IN to Battery
5	MP9184A PWR OUT

Revision History

Revision	Date	Revision Summary
3	09-08-2016	Initial Release
4	09-18-2016	FB pin layout change on U19.14
5	10-21-2016	Added Low Side Current Sense on the Type-A port to detect connect and disconnect event - Added MP3416 (U8) to power CCG3 and power Type-A in standby mode - Added U25 acting as an current sense on Type-A port - Added 2x NTC, 4x LED and 1x SW

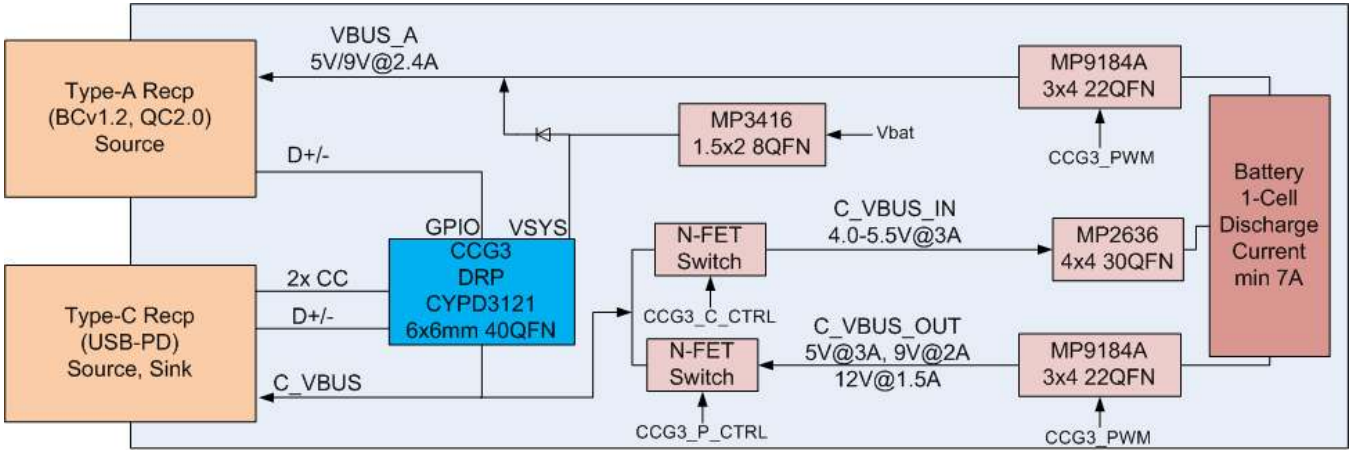

Title	MPS/Cypress CCG3 USB Type-C Power Bank Reference Schematic		
Size	Document Number		Rev
Custom	305-PD-15-XXXX		5
Date:	Monday, January 23, 2017	Sheet 1 of 5	

CCG3 Connections/Type-C Recp

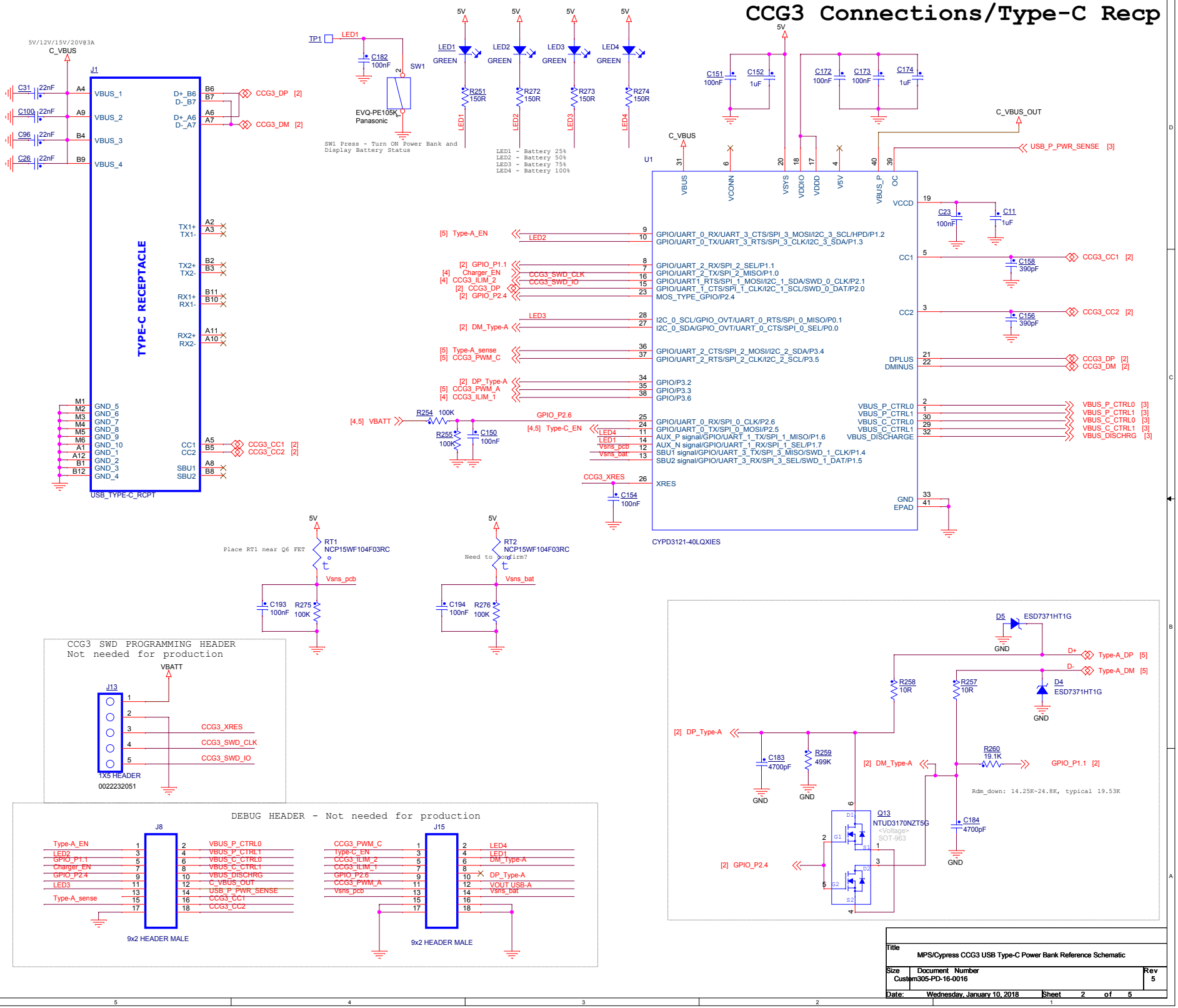

Title	MPS/Cypress CCG3 USB Type-C Power Bank Reference Schematic	
Size	Document Number	Rev
Custom	305-PD-16-0016	5
Date: Wednesday, January 10, 2018	Sheet 2 of 5	

VBUS Provider/Consumer

Ensure that NFET have very low Rds(on).
Desired is less than 10mohms which
will help improve efficiency

Ensure that NFET have very low Rds(on).
Desired is less than 10mohms which
will help improve efficiency

PROVIDER PATH

CONSUMER PATH

5v@3A, 9v@2A and 12v@1.5A
C_VBUS_OUT

R1
0.01R,1W

OVER CURRENT SENSE

[2] USB_P_PWR_SENSE

C1
22uF
25V

C175
22uF
25V

TP2

Q14
SISA12ADN

Q15
SISA12ADN

R5 0R

R2 0R

C_VBUS

C2
DNP

R233
200R,3W

R17
10M

R16
10M

R20
0R

R12
0R

R18
0R

[2] VBUS_P_CTRL0

[2] VBUS_P_CTRL1

[2] VBUS_DISCHRG

Q17
SISA12ADN

TP3

Q16
SISA12ADN

4.0v to 5.5v @3A
C_VBUS_IN

C3
4.7uF
25V

R234
10M

R28
10M

R26
0R

R24
0R

R29
0R

[2] VBUS_C_CTRL0

[2] VBUS_C_CTRL1

Title	MPS/Cypress CCG3 USB Type-C Power Bank Reference Schematic	
Size A	Document Number 305-PD-16-0016	Rev 5
Date: Thursday, November 17, 2016	Sheet 3 of 5	

MP2636 PWR IN to Battery

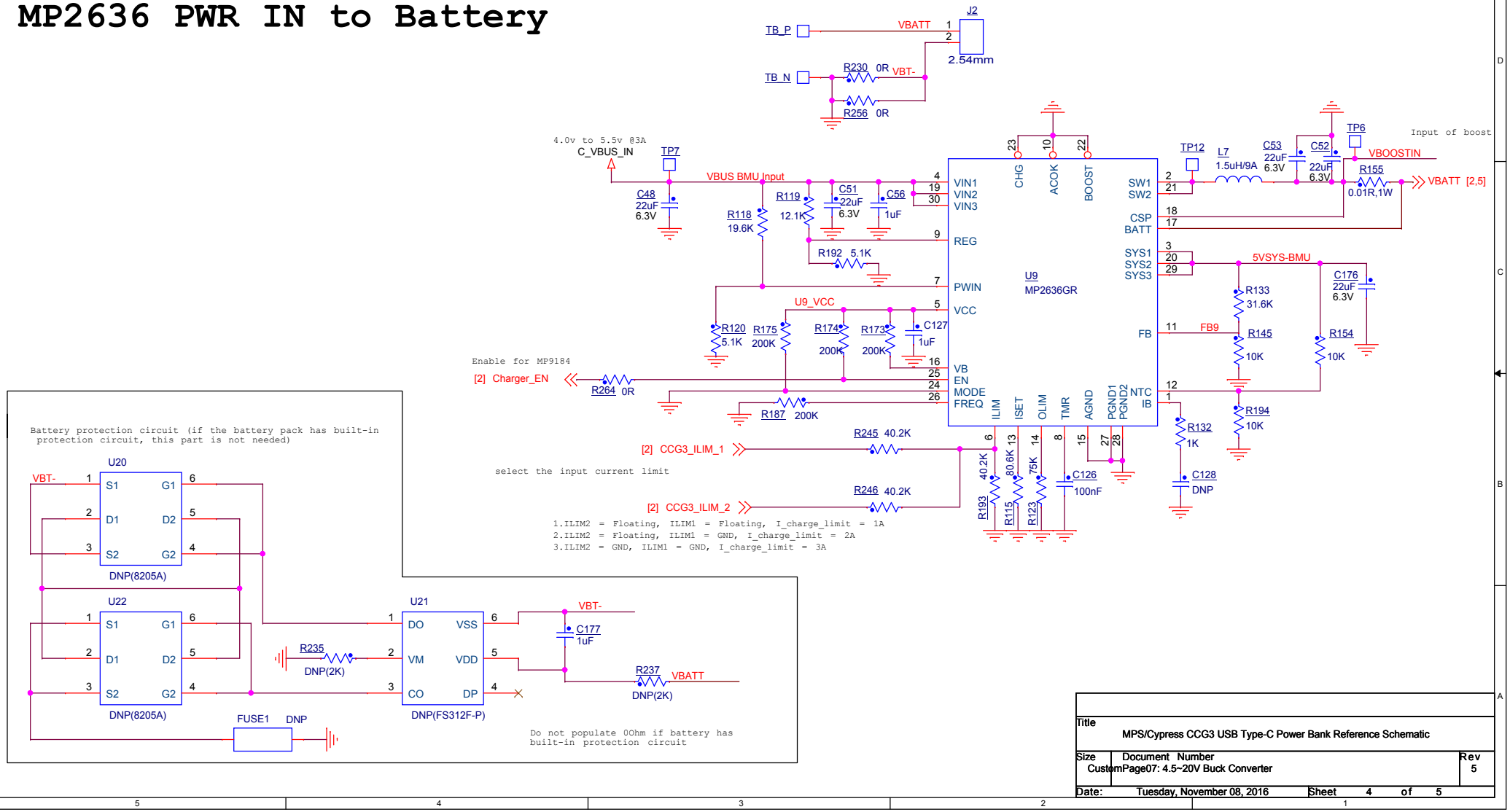

Title	MPS/Cypress CCG3 USB Type-C Power Bank Reference Schematic	
Size: Custom	Document Number: Page07: 4.5~20V Buck Converter	Rev: 5
Date: Tuesday, November 08, 2016	Sheet 4 of 5	

MP9184A PWR OUT

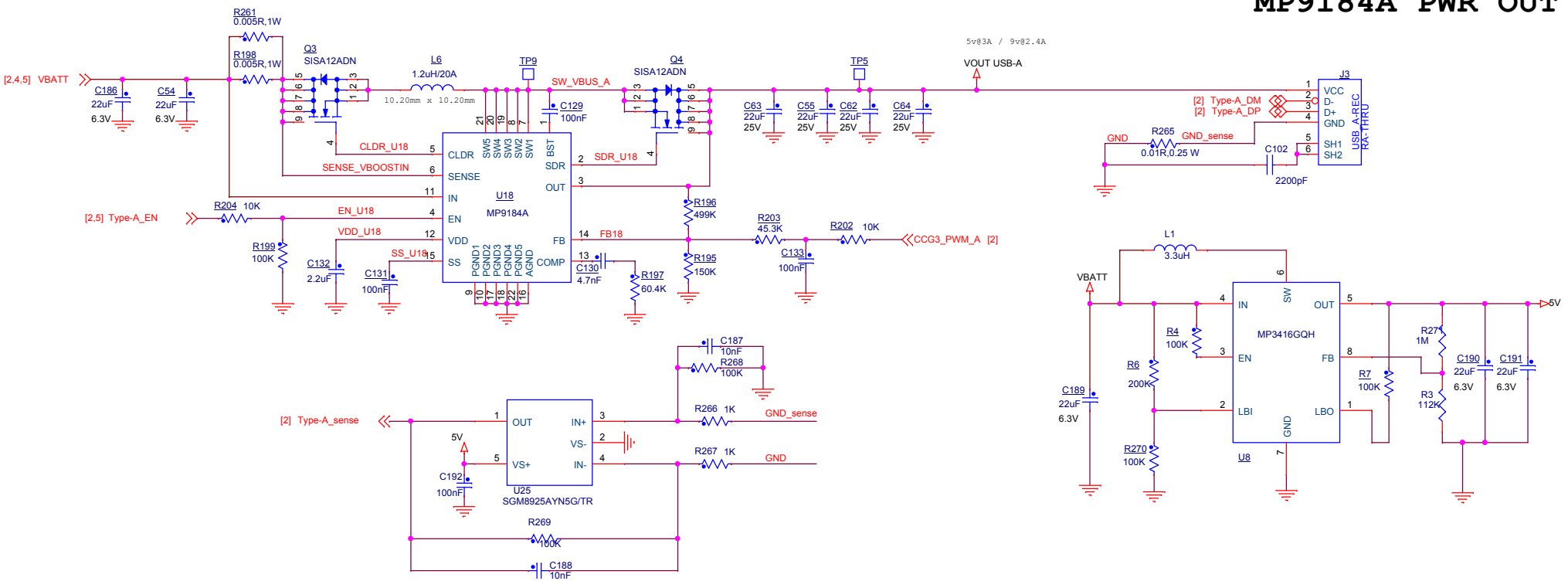

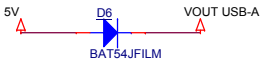

LOAD IN DETECTION FOR USB-C

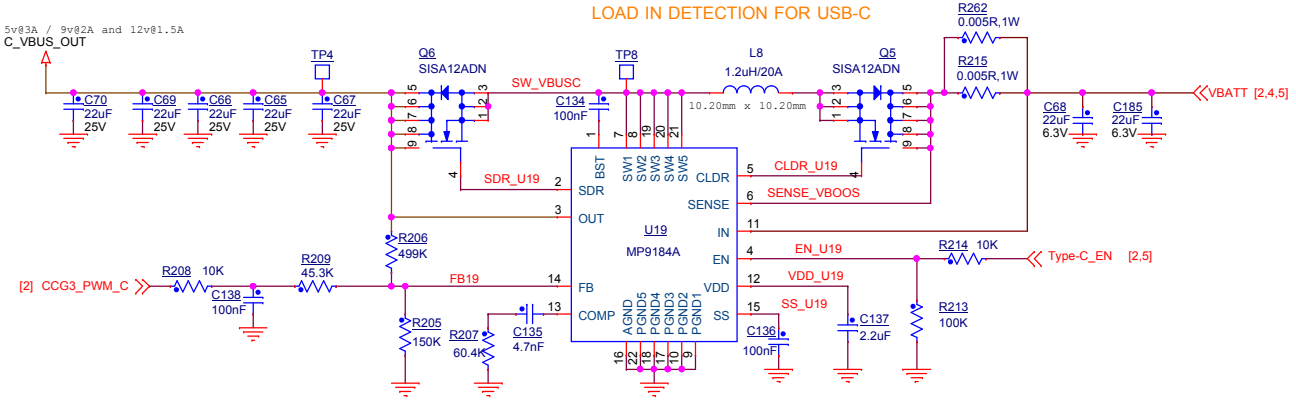

Title	MPS/Cypress CCG3 USB Type-C Power Bank Reference Schematic	
Size B	Document Number Page09 : USBA Boost Converter	Rev 5
Date: Thursday, November 17, 2016	Sheet 5 of 5	